RIETER

# Spare Parts Catalog A 21

Condenser A 21

40018258 - 1334...1335

Blessed Textiles Ltd Unit 4, PK

© Rieter. All content (text, photographs, drawings and graphic) is protected by copyright. It may not be changed, neither completely nor in extracts copied, duplicated or published without written approval. Machinery or parts thereof as shown in photographs or drawings or graphics may be subject of patent or design protection.

# A 21

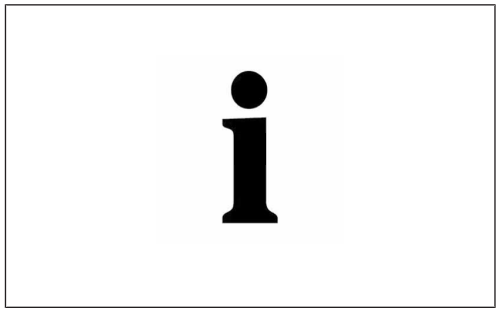

i

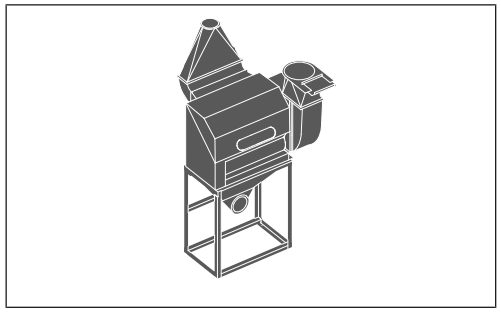

1

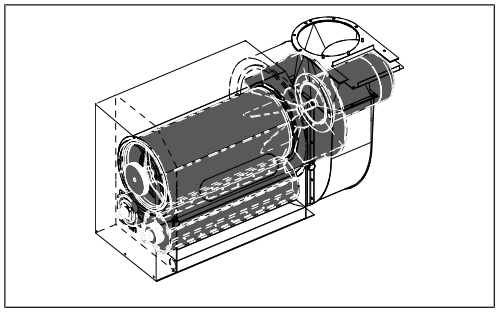

2

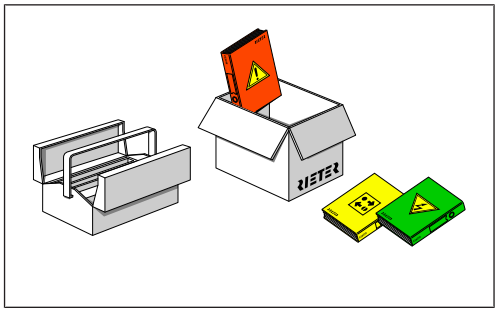

9

Dear customer,

You have made an excellent decision by opting for Rieter machines.

Our After Sales service will do everything possible to make sure that you do not have any cause to regret your decision for years to come.

Please use only original Rieter spare parts. These spare parts are always state-of-the-art and your guarantee for first-class materials and high-end processing. Please also note that Rieter is not responsible or liable for any damages to machines if this is related to spare parts or retrofits that have not been purchased directly from Rieter or through Rieter-authorized agents.

## Notices on the Catalog Usage

In order to ensure a fast delivery of the spare parts, please obey the given general information.

## Important Information

In the spare parts list, in the column “Spare Part“, you will find the symbol ⊕ or 🕒. On the drawings you will find the eye symbol or further instructions.

| Symbol | Meaning | Explanation |
|---|---|---|
| ⊕ | Recommended spare part | Preventive stocking of the most important spare parts to keep your production ongoing is a calculable risk for you. Therefore, we have marked the most important spare parts for your machine with this identifier. Benefit from Rieter’s experience. Your Rieter Parts Service will be pleased to provide a quotation for these recommended parts on request. |
| 🕒 | Limited guarantee | Timely replacement of parts that are subject to normal wear and regular maintenance will ensure a high degree of utilization of your machine. As agreed in section 11.7 of the General Terms and Conditions of Purchase and Delivery, the guarantee is excluded for damage that is caused by continued use of worn parts or inadequate maintenance, and for the parts themselves which must be replaced due to natural wear. |
| 👁 110 | Cross-reference | Connecting parts with this assembly can be found, for example, in chapter 110. |
| 👁 Option | Cross-reference | Additional material numbers that correspond to this catalog number can be found with other parameters in the appendix Option. |
| 180° | Note | The assembly is shown rotated by 180°. |
| L 001 / R 002 | Note | Catalog number for left machine side (e.g. L 001) or right machine side (e.g. R 002). |

# A 21

RIETER

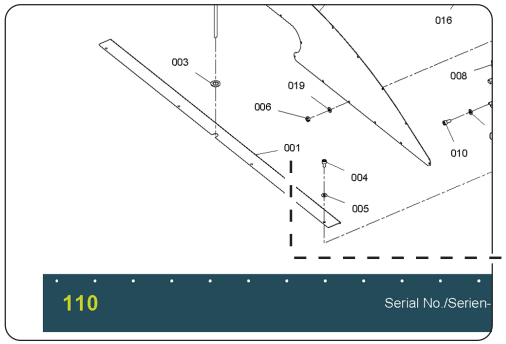


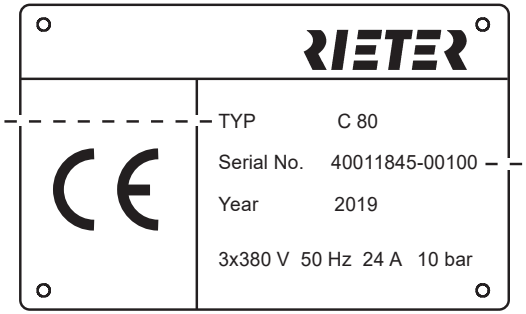


| Catalog No. Katalog-Nr. | Material no. Material-Nr. | Material Designation |
|---|---|---|
| 110.001 | 10903371 | Channel cover |
| 110.002 | 10852958 | Screw ISO 4014 M12x400 |
| 110.003 | 10472400 | Washer 17-St-200HV |
| 110.004 | 10258946 | Cyl. screw M8x14 |
| 110.005 | 10478061 | Washer 8.4-St-200HV |
| 110.006 | 10259607 | Hex. nut M8-8 |
| 110.007 | 10852716 | Window right |
| 110.008 | 10258903 | Cyl. screw M4x16 |
| 110.009 | 10920535 | Safety switch magnetic 2N.O sn7mm |
| 110.010 | 10258947 | Cyl. screw M8x16 |
| 110.011 | 10966272 | Fastening angle |
| 110.012 | 10244232 | Cyl. screw M6x18 |

| Item Artikel | Machine Type Maschinentyp | Important - Wichtig: Year Jahr | Important - Wichtig: Serial No. Serien-Nr. | Catalog No. Katalog-Nr. | Material no. Material-Nr. | Material Designation Materialbezeichnung | Quantity Menge |
|---|---|---|---|---|---|---|---|
| 1 | C 80 | 2019 | 40011845-00100 | 110.001 | 10903371 | Channel cover | 1 |
| | | | | | | | |
| | | | | | | | |

Maschinenfabrik Rieter AG, CH-8406 Winterthur

RIETER

# Parts

Please fill in the form and send it to your agent or upload it directly to our online tool ESSENTIALorder (login.rieter.com).

Bitte senden Sie das ausgefüllte Formular an Ihren Agenten oder laden Sie es direkt in unserem Online-Tool ESSENTIALorder (login.rieter.com) hoch.

- ☐ Proforma Invoice / Proformarechnung
- ☐ Quotation / Angebot
- ☒ Order / Bestellung
- ☐ Partial Shipment / Teillieferung
- ☒ Full Shipment / Komplettlieferung

Customer No. / Kunden-Nr.: 50000

Customer Address / Kundenadresse:
We make it LTD
Mill Road 91
RIE TER Mill Town
United Kingdom

Customer Reference / Kundenreferenz: 000 - 01.10.2019

Shipping Address / Versandadresse:
We make it LTD / John Smith
Mill Road 91, RIE TER Mill Town

Means of Transport / Transportart: by courier

Remarks / Bemerkungen:

Date/Signature / Datum/Unterschrift:

| Item / Artikel | Machine Type / Maschinentyp | Important - Wichtig: Year / Jahr | Important - Wichtig: Serial No. / Serien-Nr. | Catalog No. / Katalog-Nr. | Material no. / Material-Nr. | Material Designation / Materialbezeichnung | Quantity / Menge |
|---|---|---|---|---|---|---|---|
| 1 | C80 | 2019 | 40011845-00100 | 110.001 | 10903371 | Channel cover | 1 |
| 2 | C80 | 2019 | 40011845-00100 | 110.002 | 10852958 | Screw M12x400 | 4 |
| 3 | C80 | 2019 | 40011845-00100 | 110.004 | 10258946 | Cyl. screw M8x14 | 2 |
| | | | | | | | |
| | | | | | | | |

Maschinenfabrik Rieter AG, CH-8406 Winterthur

RIETER

# Parts

Please fill in the form and send it to your agent or upload it directly to our online tool ESSENTIALorder (login.rieter.com).

Bitte senden Sie das ausgefüllte Formular an Ihren Agenten oder laden Sie es direkt in unserem Online-Tool ESSENTIALorder (login.rieter.com) hoch.

☐ Proforma Invoice
Proformarechnung

☐ Quotation
Angebot

☐ Order
Bestellung

☐ Partial Shipment
Teillieferung

☐ Full Shipment
Komplettlieferung

Customer No.
Kunden-Nr. _____

Customer Address
Kundenadresse _____

_____

_____

_____

Customer Reference
Kundenreferenz _____

Shipping Address
Versandadresse _____

_____

Means of Transport
Transportart _____

Remarks
Bemerkungen _____

_____

_____

DATE/SIGNATURE
Datum/Unterschrift _____

| Item<br>Artikel | Machine Type<br>Maschinentyp | Important - Wichtig | | Catalog No.<br>Katalog-Nr. | Material no.<br>Material-Nr. | Material Designation<br>Materialbezeichnung | Quantity<br>Menge |
|---|---|---|---|---|---|---|---|
| | | Year<br>Jahr | Serial No.<br>Serien-Nr. | | | | |
| | | | | | | | |
| | | | | | | | |
| | | | | | | | |
| | | | | | | | |
| | | | | | | | |

Maschinenfabrik Rieter AG, CH-8406 Winterthur

RIETER

| Item<br>Artikel | Machine Type<br>Maschinentyp | Important - Wichtig<br>Year<br>Jahr | Serial No.<br>Serien-Nr. | Catalog No.<br>Katalog-Nr. | Material no.<br>Material-Nr. | Material Designation<br>Materialbezeichnung | Quantity<br>Menge |
|---|---|---|---|---|---|---|---|
| | | | | | | | |
| | | | | | | | |
| | | | | | | | |
| | | | | | | | |
| | | | | | | | |
| | | | | | | | |
| | | | | | | | |
| | | | | | | | |
| | | | | | | | |
| | | | | | | | |
| | | | | | | | |
| | | | | | | | |
| | | | | | | | |
| | | | | | | | |
| | | | | | | | |

Maschinenfabrik Rieter AG, CH-8406 Winterthur

RIETER

# Parts

Please fill in the form and send it to your agent or upload it directly to our online tool ESSENTIALorder (login.rieter.com).

Bitte senden Sie das ausgefüllte Formular an Ihren Agenten oder laden Sie es direkt in unserem Online-Tool ESSENTIALorder (login.rieter.com) hoch.

☐ Proforma Invoice
Proformarechnung

☐ Quotation
Angebot

☐ Order
Bestellung

☐ Partial Shipment
Teillieferung

☐ Full Shipment
Komplettlieferung

Customer No.
Kunden-Nr. _____

Customer Address
Kundenadresse _____

_____

_____

_____

Customer Reference
Kundenreferenz _____

Shipping Address
Versandadresse _____

_____

Means of Transport
Transportart _____

Remarks
Bemerkungen _____

_____

_____

DATE/SIGNATURE
Datum/Unterschrift _____

| Item<br>Artikel | Machine Type<br>Maschinentyp | Important - Wichtig | | Catalog No.<br>Katalog-Nr. | Material no.<br>Material-Nr. | Material Designation<br>Materialbezeichnung | Quantity<br>Menge |
|---|---|---|---|---|---|---|---|
| | | Year<br>Jahr | Serial No.<br>Serien-Nr. | | | | |
| | | | | | | | |
| | | | | | | | |
| | | | | | | | |
| | | | | | | | |
| | | | | | | | |

Maschinenfabrik Rieter AG, CH-8406 Winterthur

RIETER

| Item<br>Artikel | Machine Type<br>Maschinentyp | Important - Wichtig<br>Year<br>Jahr | Serial No.<br>Serien-Nr. | Catalog No.<br>Katalog-Nr. | Material no.<br>Material-Nr. | Material Designation<br>Materialbezeichnung | Quantity<br>Menge |
|---|---|---|---|---|---|---|---|
| | | | | | | | |
| | | | | | | | |
| | | | | | | | |
| | | | | | | | |
| | | | | | | | |
| | | | | | | | |
| | | | | | | | |
| | | | | | | | |
| | | | | | | | |
| | | | | | | | |
| | | | | | | | |
| | | | | | | | |
| | | | | | | | |
| | | | | | | | |
| | | | | | | | |

Maschinenfabrik Rieter AG, CH-8406 Winterthur

RIETER

# Parts

Please fill in the form and send it to your agent or upload it directly to our online tool ESSENTIALorder (login.rieter.com).

Bitte senden Sie das ausgefüllte Formular an Ihren Agenten oder laden Sie es direkt in unserem Online-Tool ESSENTIALorder (login.rieter.com) hoch.

☐ Proforma Invoice
Proformarechnung

☐ Quotation
Angebot

☐ Order
Bestellung

☐ Partial Shipment
Teillieferung

☐ Full Shipment
Komplettlieferung

Customer No.
Kunden-Nr. _____

Customer Address
Kundenadresse _____

_____

_____

_____

Customer Reference
Kundenreferenz _____

Shipping Address
Versandadresse _____

_____

Means of Transport
Transportart _____

Remarks
Bemerkungen _____

_____

_____

DATE/SIGNATURE
Datum/Unterschrift _____

| Item<br>Artikel | Machine Type<br>Maschinentyp | Important - Wichtig | | Catalog No.<br>Katalog-Nr. | Material no.<br>Material-Nr. | Material Designation<br>Materialbezeichnung | Quantity<br>Menge |
|---|---|---|---|---|---|---|---|
| | | Year<br>Jahr | Serial No.<br>Serien-Nr. | | | | |
| | | | | | | | |
| | | | | | | | |
| | | | | | | | |
| | | | | | | | |
| | | | | | | | |

Maschinenfabrik Rieter AG, CH-8406 Winterthur

RIETER

| Item<br>Artikel | Machine Type<br>Maschinentyp | Important - Wichtig<br>Year<br>Jahr | Serial No.<br>Serien-Nr. | Catalog No.<br>Katalog-Nr. | Material no.<br>Material-Nr. | Material Designation<br>Materialbezeichnung | Quantity<br>Menge |
|---|---|---|---|---|---|---|---|
| | | | | | | | |
| | | | | | | | |
| | | | | | | | |
| | | | | | | | |
| | | | | | | | |
| | | | | | | | |
| | | | | | | | |
| | | | | | | | |
| | | | | | | | |
| | | | | | | | |
| | | | | | | | |
| | | | | | | | |
| | | | | | | | |
| | | | | | | | |
| | | | | | | | |

# A 21

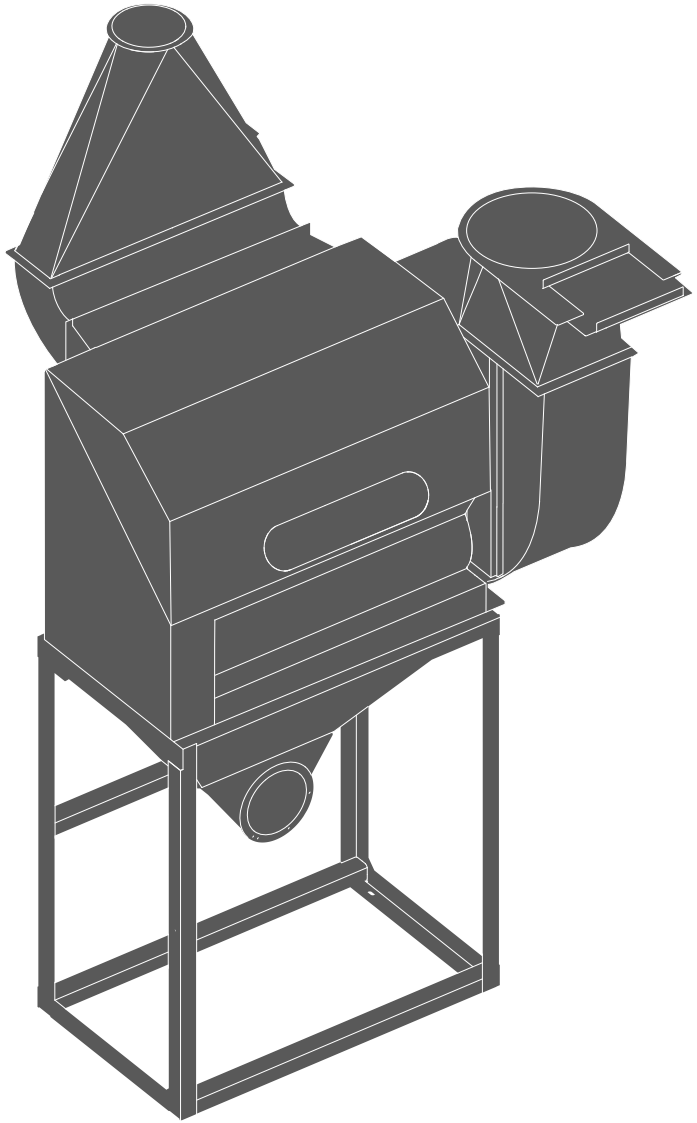

ZNP0000000000000001000067825801000_1.svg



Serial No./Serien-Nr. : 40018258-1334...1335 | Date/Datum : 25.07.2021

# A 21

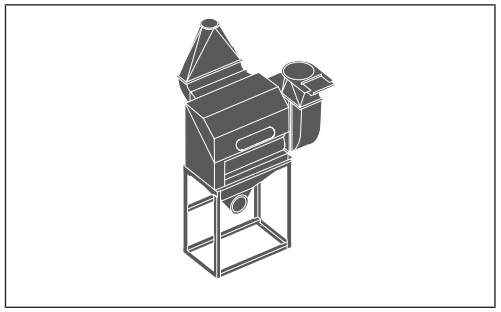

**110**

# A 21

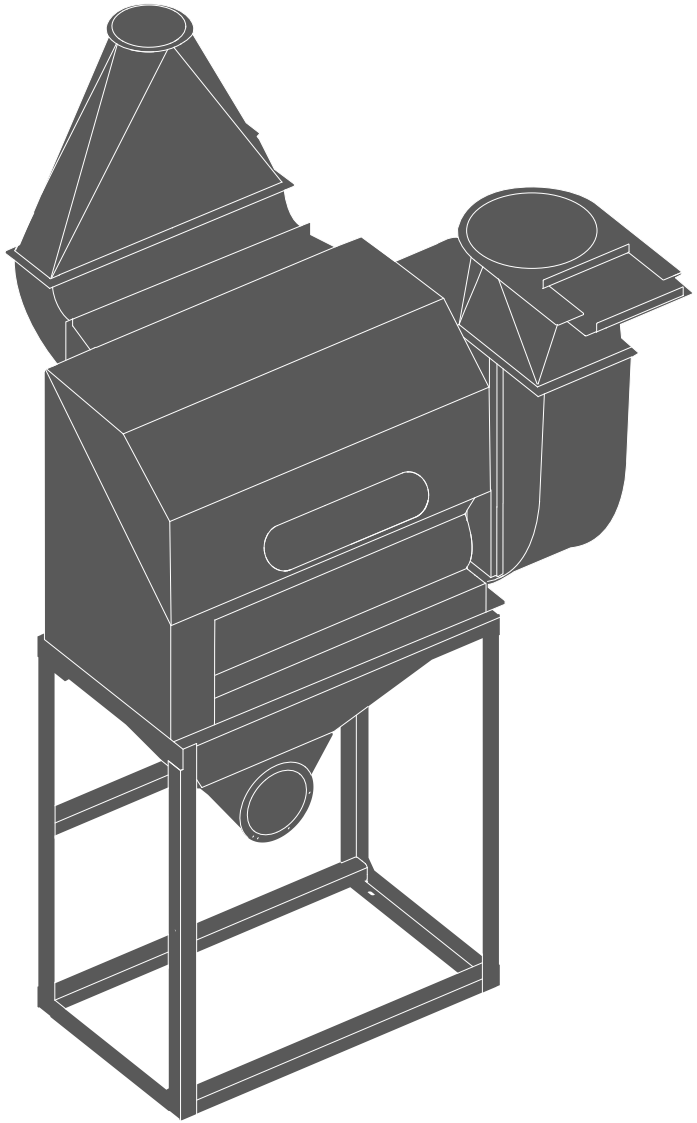

ZNP000000000000001000067825901000_1.svg

# A 21

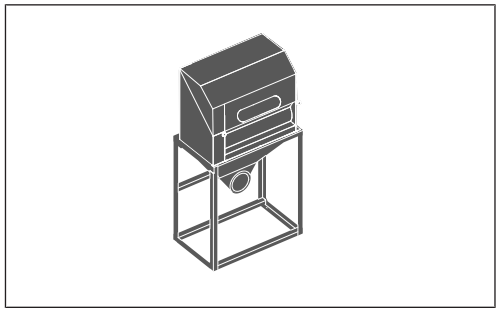

**11010**

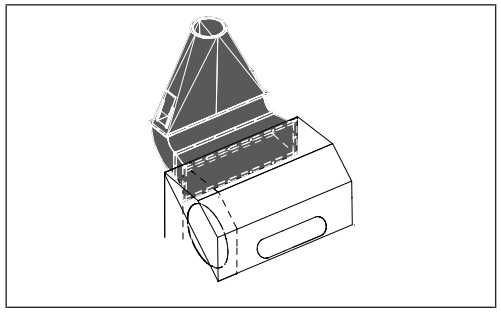

**11020**

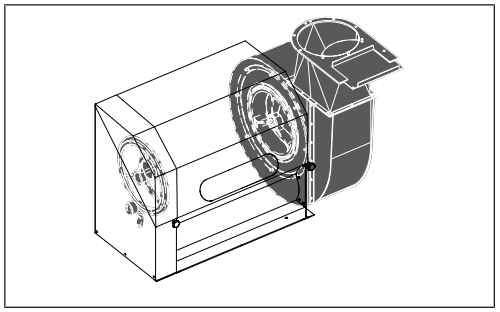

**11030**

# A 21

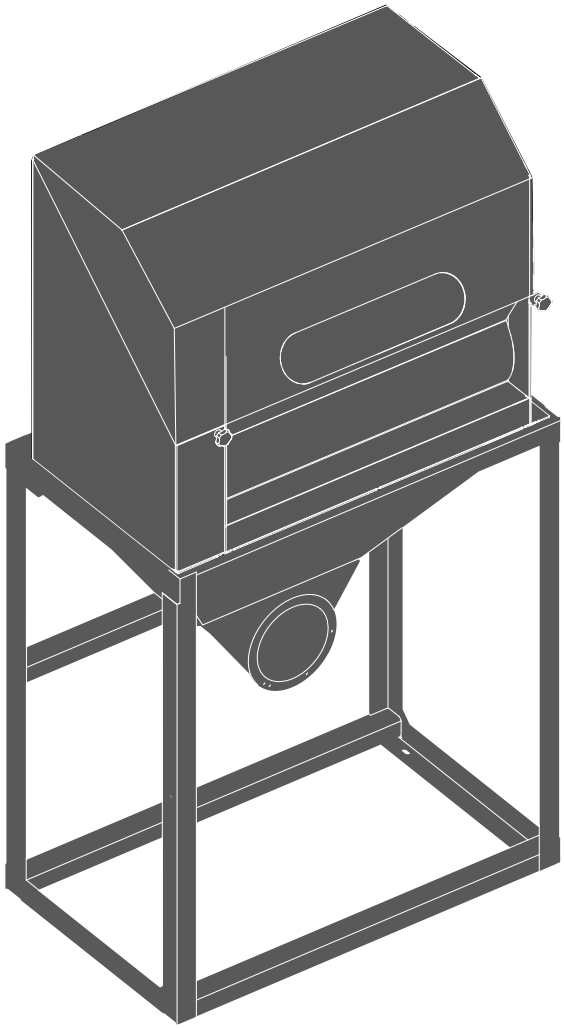

ZNP000000000000001000067826001000_1.svg

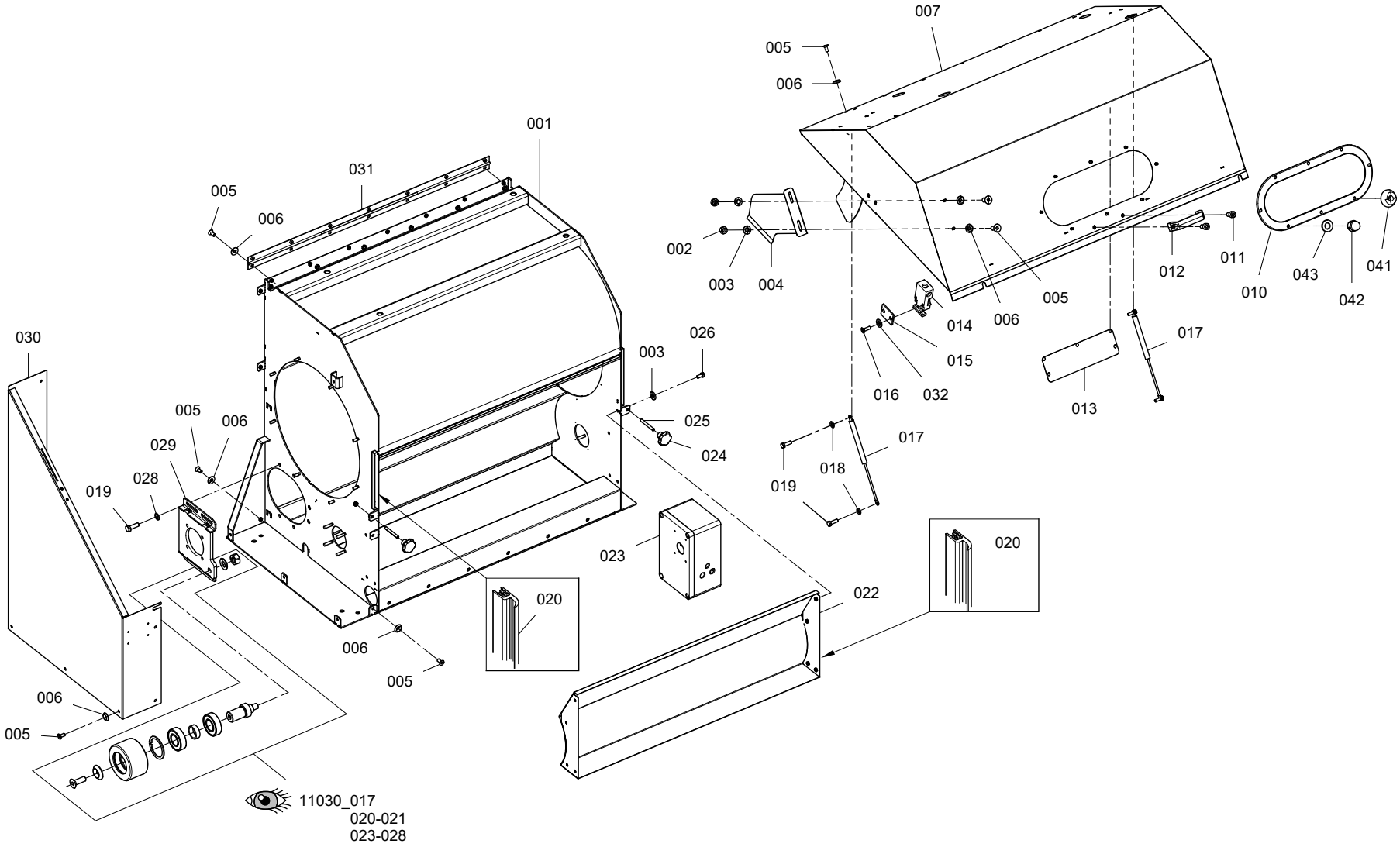


ZED0000000000000000001116154701001_1.svg

Customer
Blessed Textiles Ltd Unit 4, 56984

RIETER

| Catalog No. Katalog-Nr. | Material no. Material-Nr. | Material Designation | Materialbezeichnung | Symbol Symbol |
|---|---|---|---|---|
| 11010.001 | 11081316 | Rack | Gestell | |
| 11010.002 | 10354192 | Hex. nut M6-8 | 6kt-Mutter M6-8 | |
| 11010.003 | 10456142 | Washer 6.4-St-200HV | Scheibe 6.4-St-200HV | |
| 11010.004 | 10467902 | Pusher | Schieber | |
| 11010.005 | 0908-6527 | Socket flat head screw M6x14 | Senkschraube M6x14 | |
| 11010.006 | 10451993 | Washer w. lowering SN213912-6.4/18 | Scheibe m. Senkung SN213912-6.4/18 | |
| 11010.007 | 10667146 | Cover | Abdeckung | |
| 11010.010 | 10034538 | Window 152x442 | Fenster 152x442 | |
| 11010.011 | 0908-5477 | Cyl. screw M8x16 | Zyl.Schraube M8x16 | |
| 11010.012 | 0900-2036 | Bow handle black 117 | Bügelgriff schwarz 117 | |
| 11010.013 | 10567775 | Cover plate | Abdeckplatte | |
| 11010.014 | 10058206 | Safety limit switch AgNi 1s1oe | Sicherheitsendschalter AgNi 1s1oe | ⊕ |
| 11010.015 | 10667536 | Distance plate | Distanzplatte | |
| 11010.016 | 10729492 | Socket flat head screw M5x35 | Senkschraube M5x35 | |
| 11010.017 | 10082002 | Gas pressure spring 120mm / 250N | Gasdruckfeder 120mm / 250N | |
| 11010.018 | 10478061 | Washer 8.4-St-200HV | Scheibe 8.4-St-200HV | |
| 11010.019 | 10259086 | Hex. screw M8x25 | 6kt-Schraube M8x25 | |
| 11010.020 | 10532211 | Profile 15.6x8.5-EPDM 65 ShA | Profil 15.6x8.5-EPDM 65 ShA | |
| 11010.022 | 11090615 | Guiding profile | Führungsprofil | |
| 11010.023 | 11079119 | Control system condenser A 21 | Steuerung Ansaugkasten A 21 | |
| 11010.024 | 0900-0483 | Star-shaped handle 50/M8 | Sterngriff 50/M8 | |
| 11010.025 | 0903-8081 | Threaded pin M8x70-45H | Gewindestift M8x70-45H | |
| 11010.026 | 10259079 | Hex. screw M6x12 | 6kt-Schraube M6x12 | |
| 11010.028 | 10461551 | Locking washer 8.4/13 | Sicherungsscheibe 8.4/13 | |
| 11010.029 | 10678905 | Motor carrier | Motorträger | |
| 11010.030 | 10831538 | Cover left | Abdeckung links | |
| 11010.031 | 10335653 | Hinge band 50x1,5 | Scharnierband 50x1,5 | |
| 11010.032 | 10259480 | Washer w. lowering SN213912-5.3/16 | Scheibe m. Senkung SN213912-5.3/16 | |
| 11010.041 | 10563847 | Safety nut M6 | Sicherheitsmutter M6 | |
| 11010.042 | 10354155 | Cap nut M6-6 | 6kt-Hutmutter M6-6 | |

# A 21

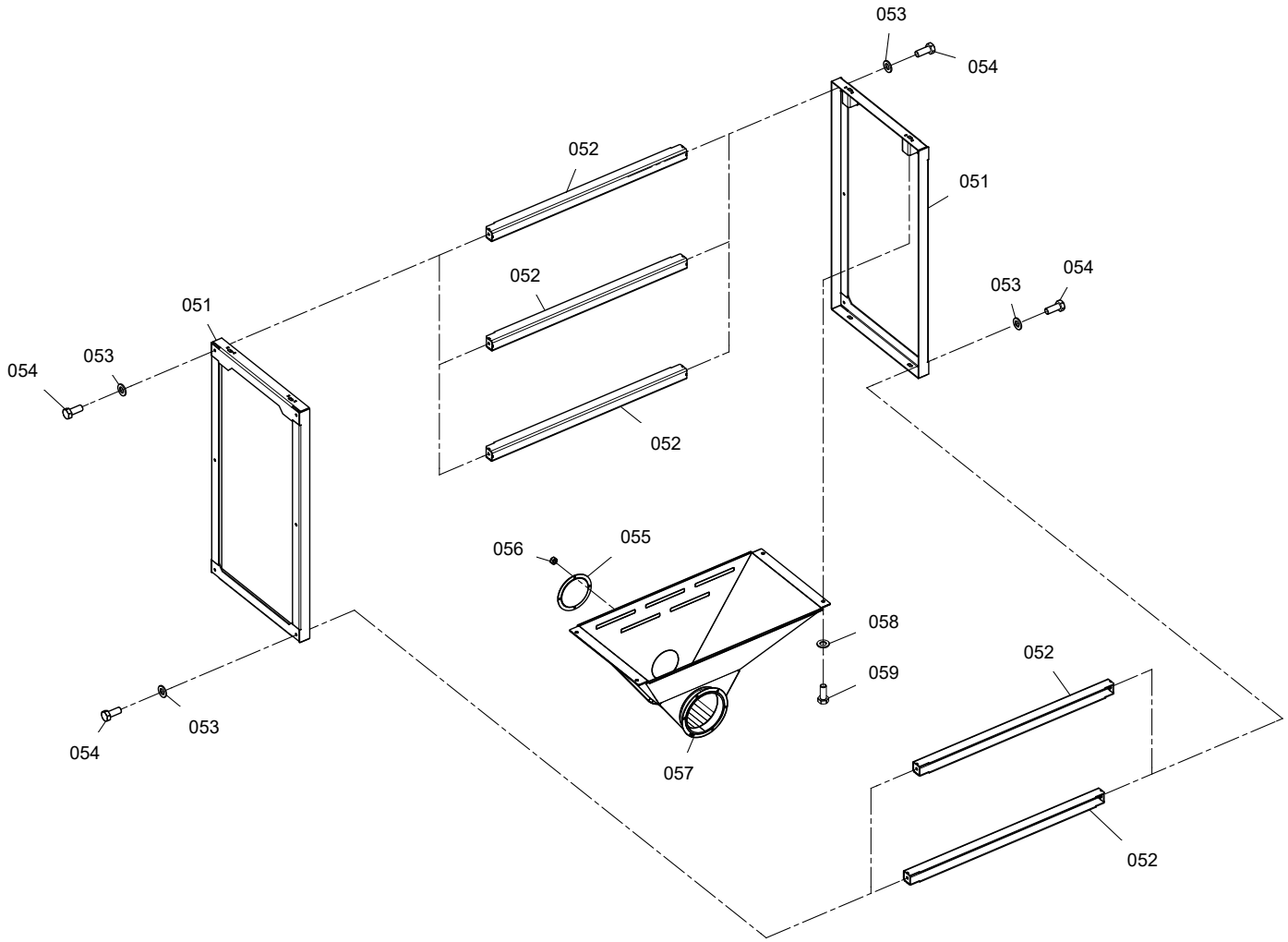


ZED0000000000000000001116154701001_2.svg

**Customer**
**Blessed Textiles Ltd Unit 4, 56984**

RIETER

| Catalog No.<br>Katalog-Nr. | Material no.<br>Material-Nr. | Material Designation | Materialbezeichnung | Symbol<br>Symbol |
|---|---|---|---|---|
| 11010.051 | 10746533 | Rest complete | Stütze komplett | |
| 11010.052 | 10330554 | Crossbar | Traverse | |
| 11010.053 | 10478062 | Washer 10.5-St-200HV | Scheibe 10.5-St-200HV | |
| 11010.054 | 10259092 | Hex. screw M10x25 | 6kt-Schraube M10x25 | |
| 11010.055 | 0912-1603 | Window dm160 | Fenster dm160 | |
| 11010.056 | 10673636 | Hex. safety nut M6-8 | 6kt-Sicherungsmutter M6-8 | |
| 11010.057 | 10330579 | Delivery funnel complete D=300 | Auslauftrichter komplett D=300 | |
| 11010.058 | 10478796 | Washer 13-St-200HV | Scheibe 13-St-200HV | |
| 11010.059 | 10561127 | Compact dowel HKV M12 | Kompaktdübel HKV M12 | |

# A 21

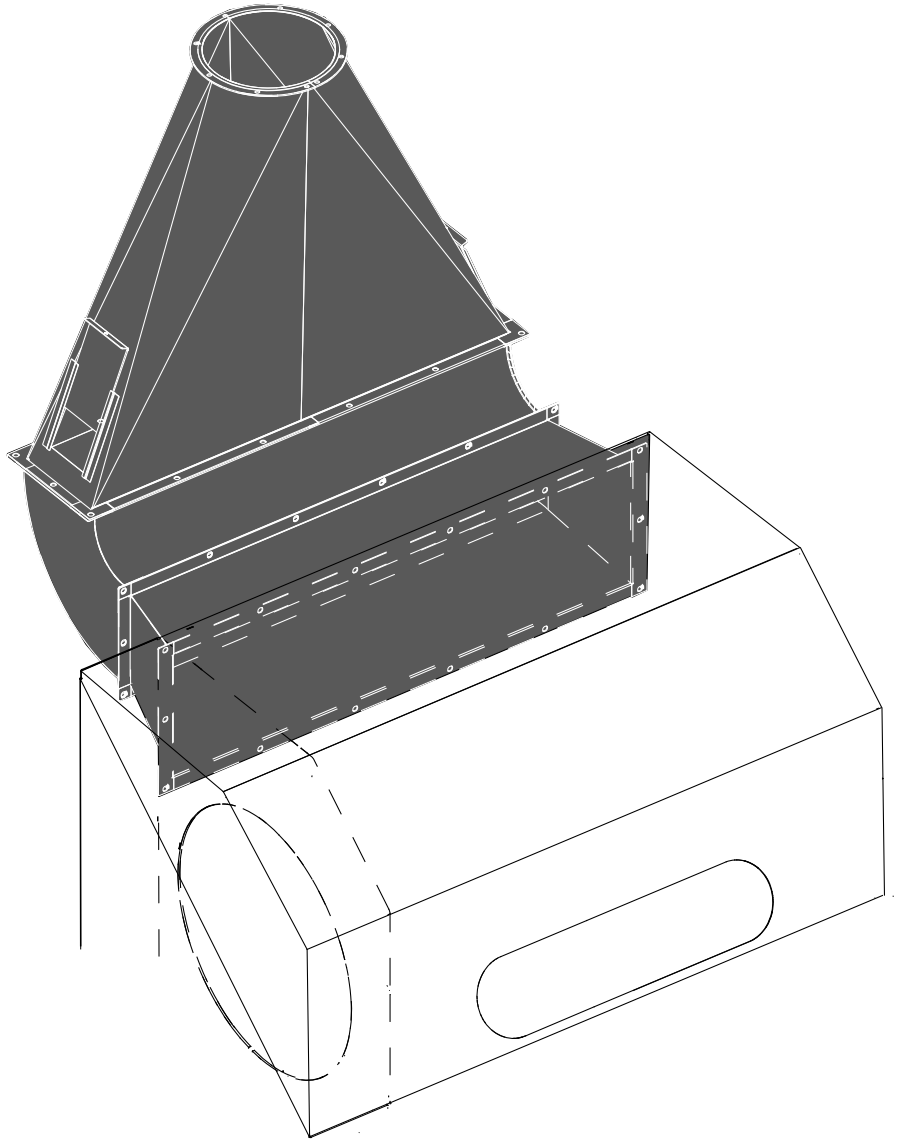

ZNP0000000000000010000678262010 00_1.svg

# A 21

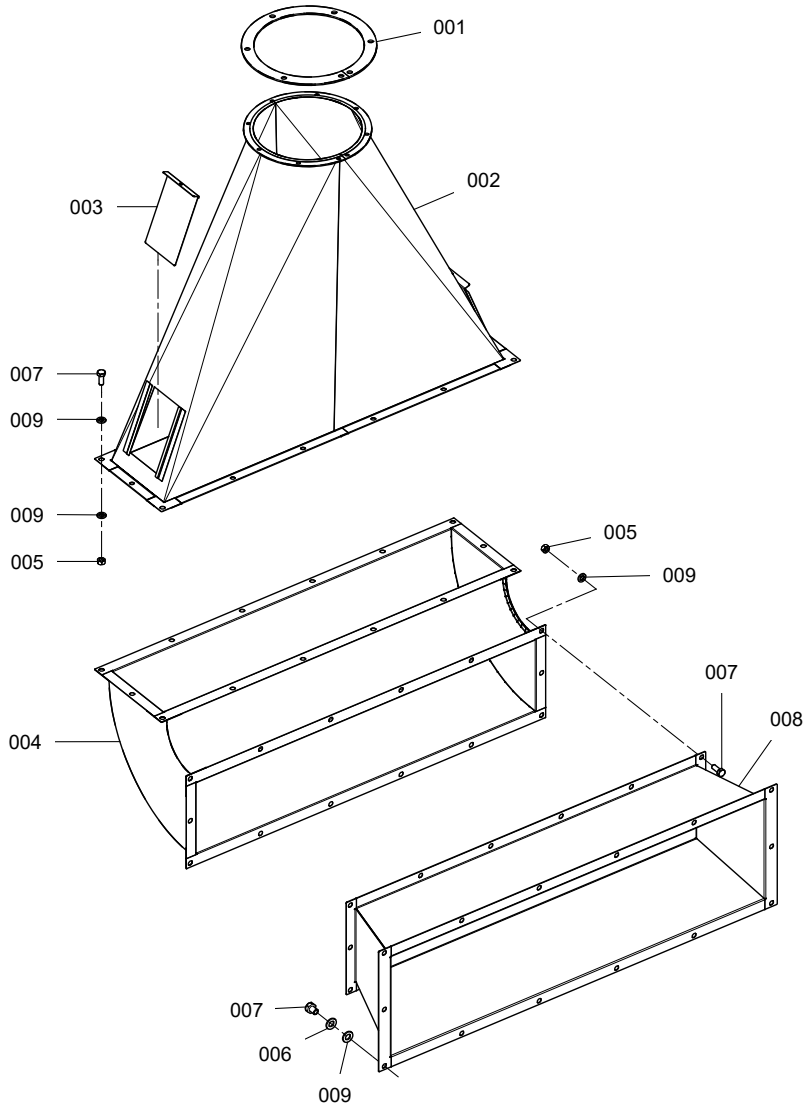


ZED0000000000000000001116154801003_1.svg

**Customer**
**Blessed Textiles Ltd Unit 4, 56984**

RIETER

| Catalog No.<br>Katalog-Nr. | Material no.<br>Material-Nr. | Material Designation | Materialbezeichnung | Symbol<br>Symbol |
|---|---|---|---|---|
| 11020.001 | 0047-0014 | Ring DM 300 | Ring DM 300 | |
| 11020.002 | 9601-0275 | Funnel type 300 | Trichter Typ 300 | |
| 11020.003 | 9601-0247 | Pusher | Schieber | |
| 11020.004 | 9601-0214 | Channel elbow | Kanalbogen | |
| 11020.005 | 10259607 | Hex. nut M8-8 | 6kt-Mutter M8-8 | |
| 11020.006 | 10461551 | Locking washer 8.4/13 | Sicherungsscheibe 8.4/13 | |
| 11020.007 | 10259084 | Hex. screw M8x16 | 6kt-Schraube M8x16 | |
| 11020.008 | 10330530 | Transition duct | Übergangskanal | |
| 11020.009 | 10478061 | Washer 8.4-St-200HV | Scheibe 8.4-St-200HV | |

# A 21

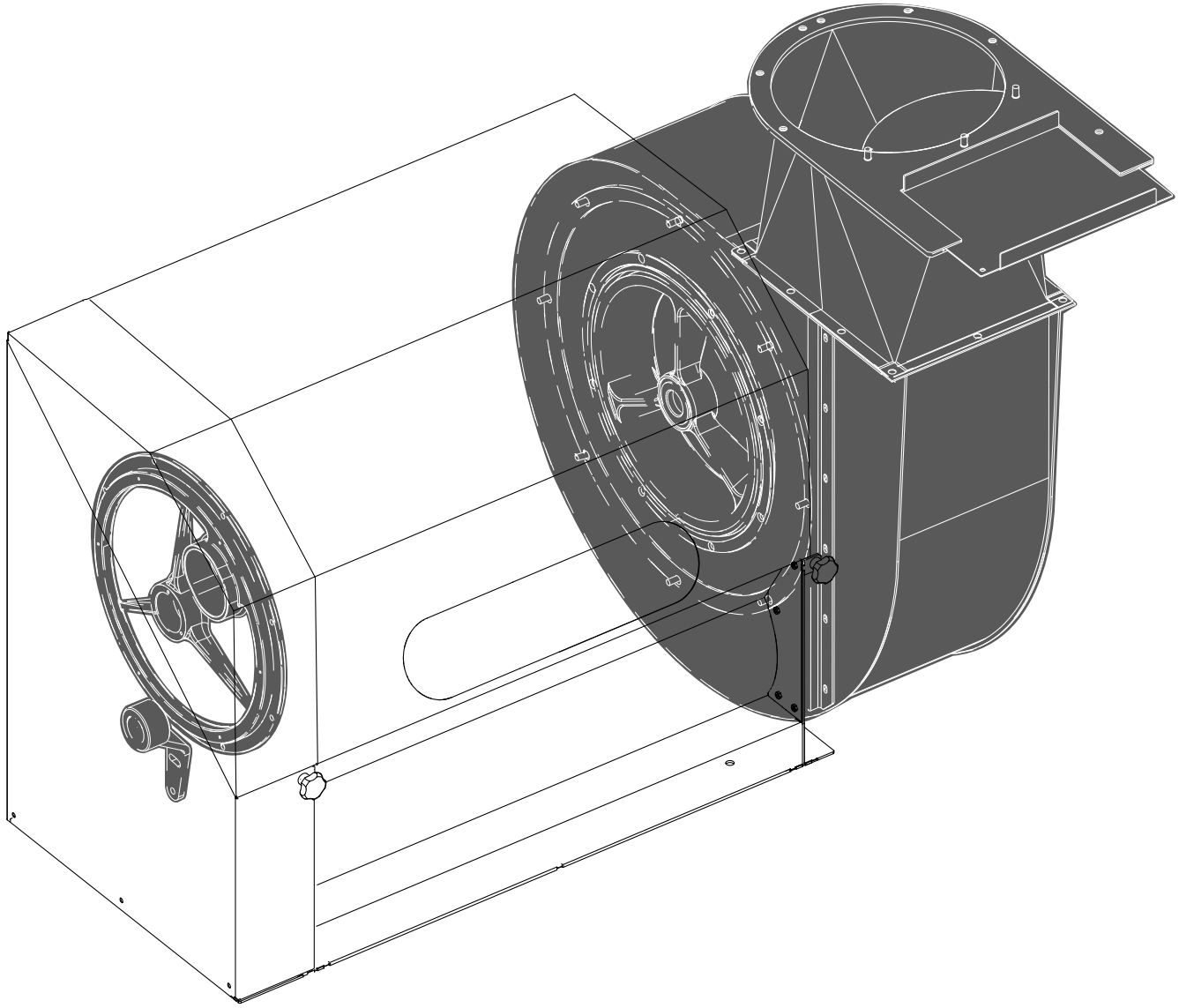

ZNP000000000000001000067826401000_1.svg

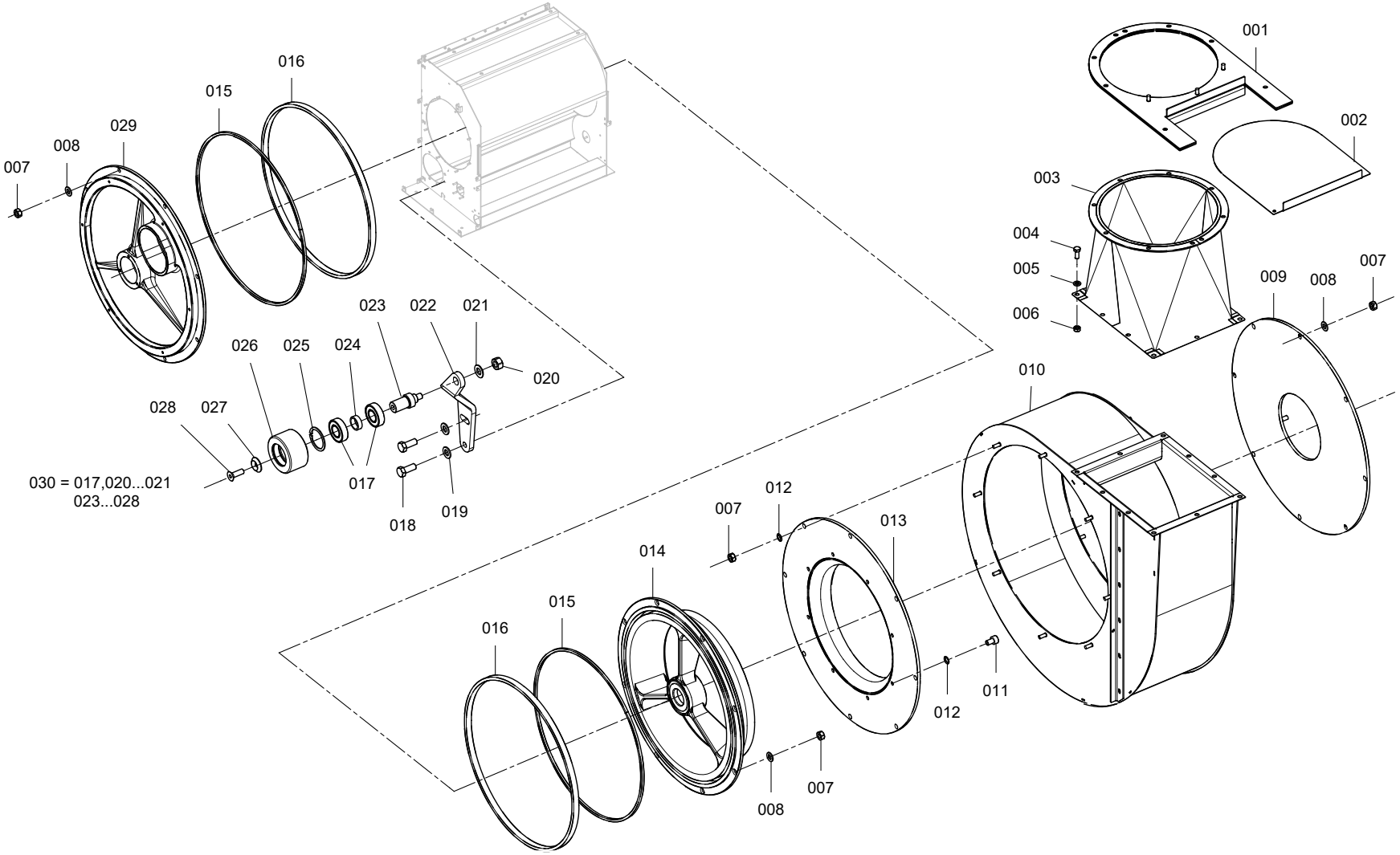


ZED0000000000000000001116154901001_1.svg

Customer
Blessed Textiles Ltd Unit 4, 56984

RIETER

| Catalog No. Katalog-Nr. | Material no. Material-Nr. | Material Designation | Materialbezeichnung | Symbol Symbol |
|---|---|---|---|---|
| 11030.001 | 0047-0017 | Reducer slide 300 | Drosselschieber 300 | |
| 11030.002 | 0044-2458 | Pusher 300 | Schieber 300 | |
| 11030.003 | 10320004 | Transition piece complete D300 | Übergangsstück komplett D300 | |
| 11030.004 | 10259080 | Hex. screw M6x16 | 6kt-Schraube M6x16 | |
| 11030.005 | 10456142 | Washer 6.4-St-200HV | Scheibe 6.4-St-200HV | |
| 11030.006 | 10354155 | Cap nut M6-6 | 6kt-Hutmutter M6-6 | |
| 11030.007 | 10259607 | Hex. nut M8-8 | 6kt-Mutter M8-8 | |
| 11030.008 | 10478061 | Washer 8.4-St-200HV | Scheibe 8.4-St-200HV | |
| 11030.009 | 11044772 | Motor carrier | Motorträger | |
| 11030.010 | 11044754 | Fan housing complete | Ventilatorgehäuse komplett | |
| 11030.011 | 10258947 | Cyl. screw M8x16 | Zyl.Schraube M8x16 | |
| 11030.012 | 10461551 | Locking washer 8.4/13 | Sicherungsscheibe 8.4/13 | |
| 11030.013 | 11044779 | Flange plate 50HZ | Flanschplatte 50HZ | |
| 11030.014 | 10330508 | Fan flange | Ventilatorflansch | |
| 11030.015 | 9601-0284 | Ring | Ring | |
| 11030.016 | 10437918 | Felt seal | Filzdichtung | |
| 11030.017 | 10435916 | Deep-groove ball brg. 20/42x12-6004-2RS | Ri.Kugellager 20/42x12-6004-2RS | |
| 11030.018 | 10259092 | Hex. screw M10x25 | 6kt-Schraube M10x25 | |
| 11030.019 | 10478062 | Washer 10.5-St-200HV | Scheibe 10.5-St-200HV | |
| 11030.020 | 10259610 | Hex. nut M10-6 | 6kt-Mutter M10-6 | |
| 11030.021 | 10542604 | Washer 10.5-St-200HV | Scheibe 10.5-St-200HV | |
| 11030.022 | 10638279 | Tension lever | Spannhebel | |
| 11030.023 | 10674973 | Off-center bolt | Taumelbolzen | |
| 11030.024 | 0220-2050 | Distance ring 20/25x8 | Distanzring 20/25x8 | |
| 11030.025 | 10355082 | Locking ring 42x1.75 | Sicherungsring 42x1.75 | |
| 11030.026 | 0220-2040 | Tension roller D70 | Spannrolle D70 | |
| 11030.027 | 10523894 | Washer w. lowering SN213912-8.4/25 | Scheibe m. Senkung SN213912-8.4/25 | |
| 11030.028 | 10693994 | Socket flat head screw M8x25 | Senkschraube M8x25 | |
| 11030.029 | 10330504 | Gear flange | Getriebeflansch | |
| 11030.030 | 10678810 | Tension roller | Spannrolle | |

# A 21

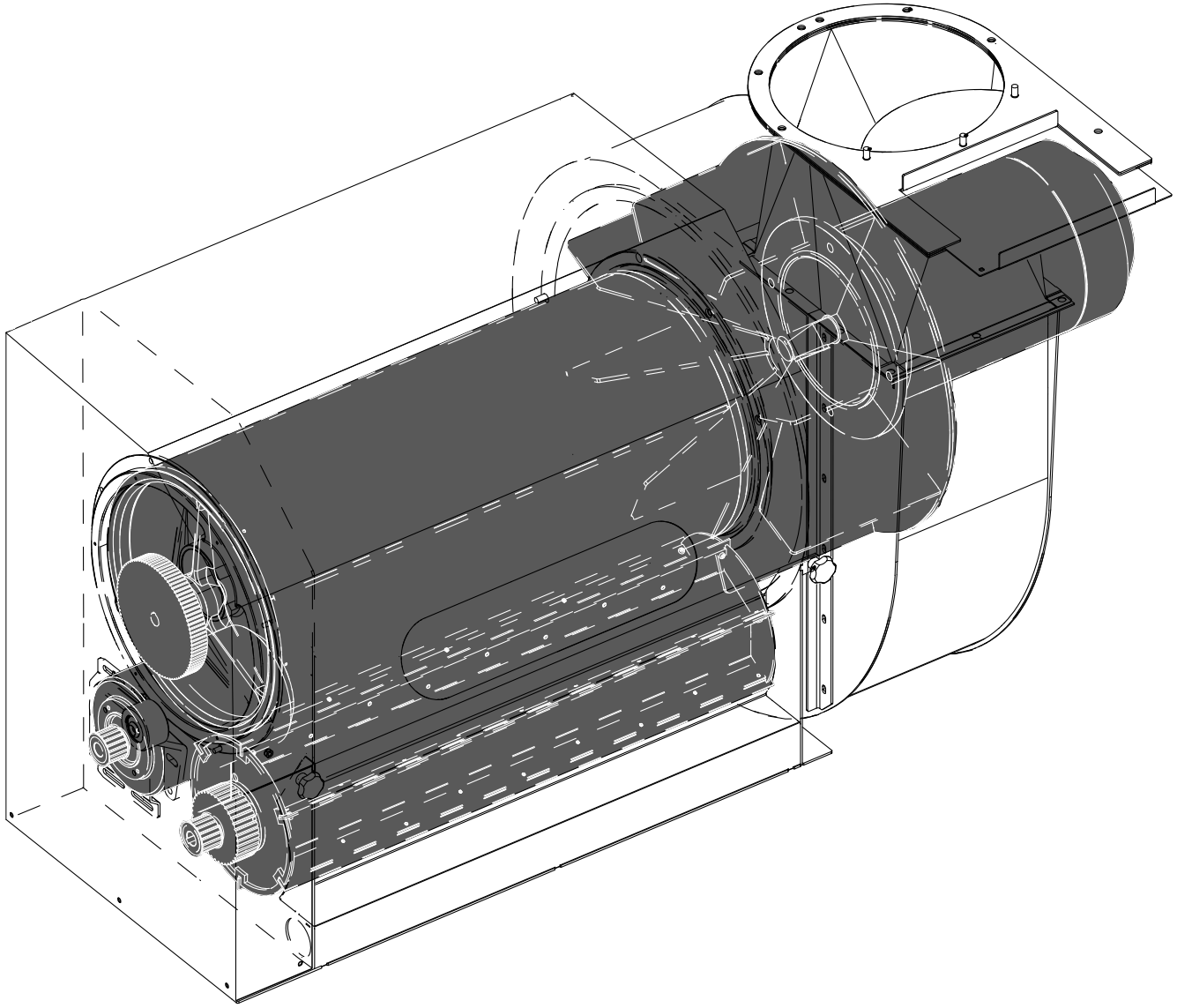

ZNP00000000000000010000678266010 00_1.svg

# A 21

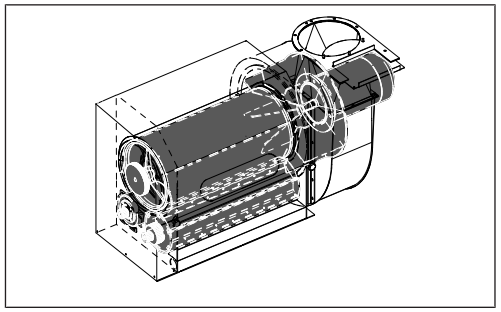

**210**

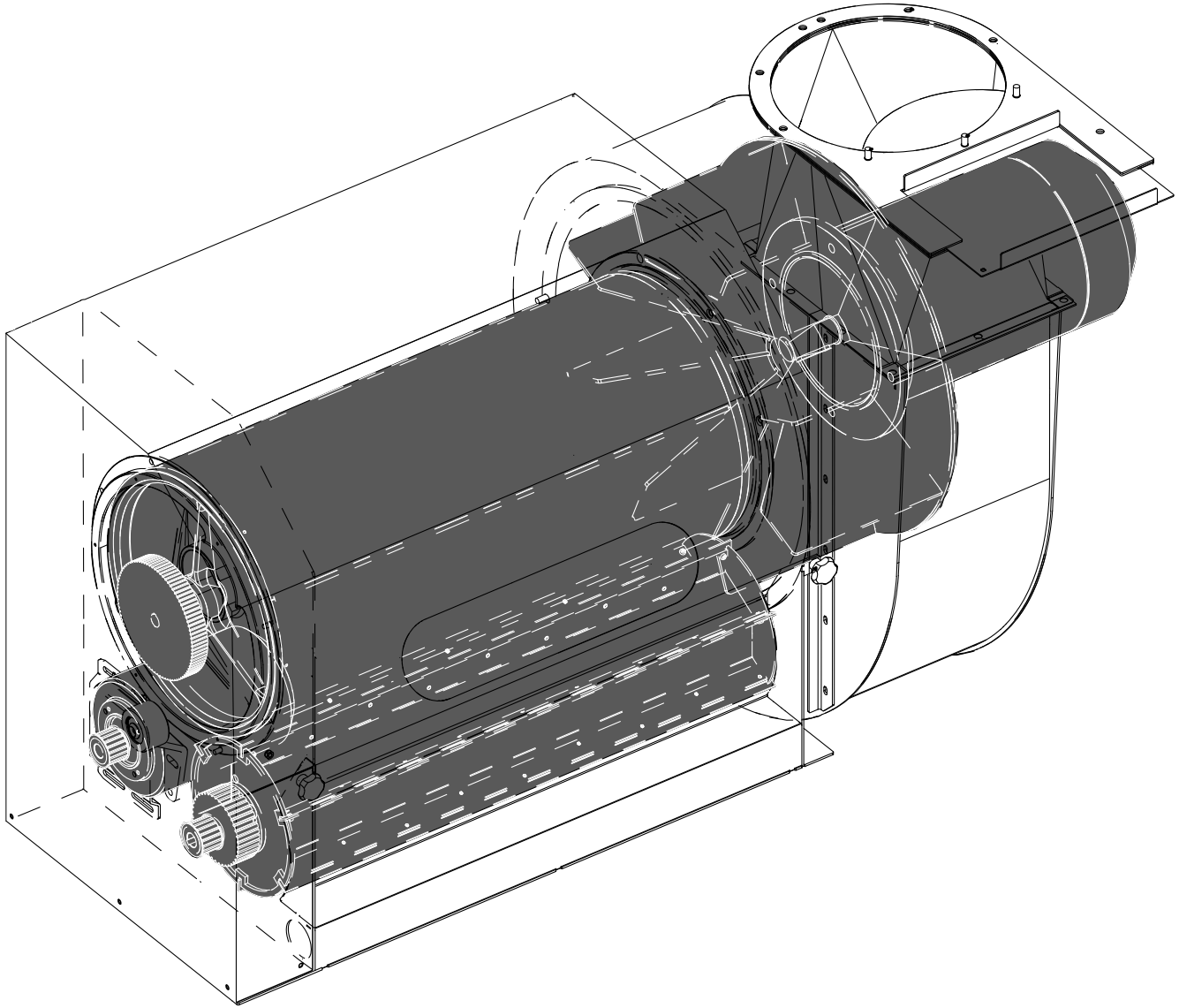

ZNP0000000000000010000678269010 00_1.svg

# A 21

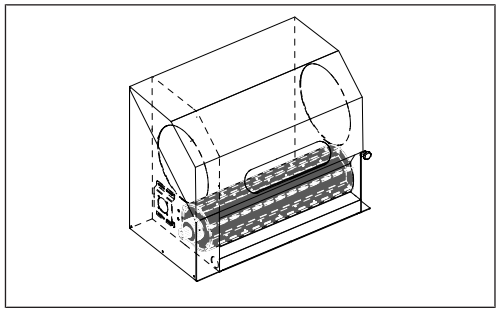

**21010**

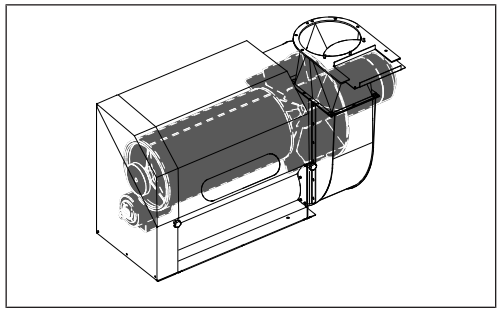

**21020**

# A 21

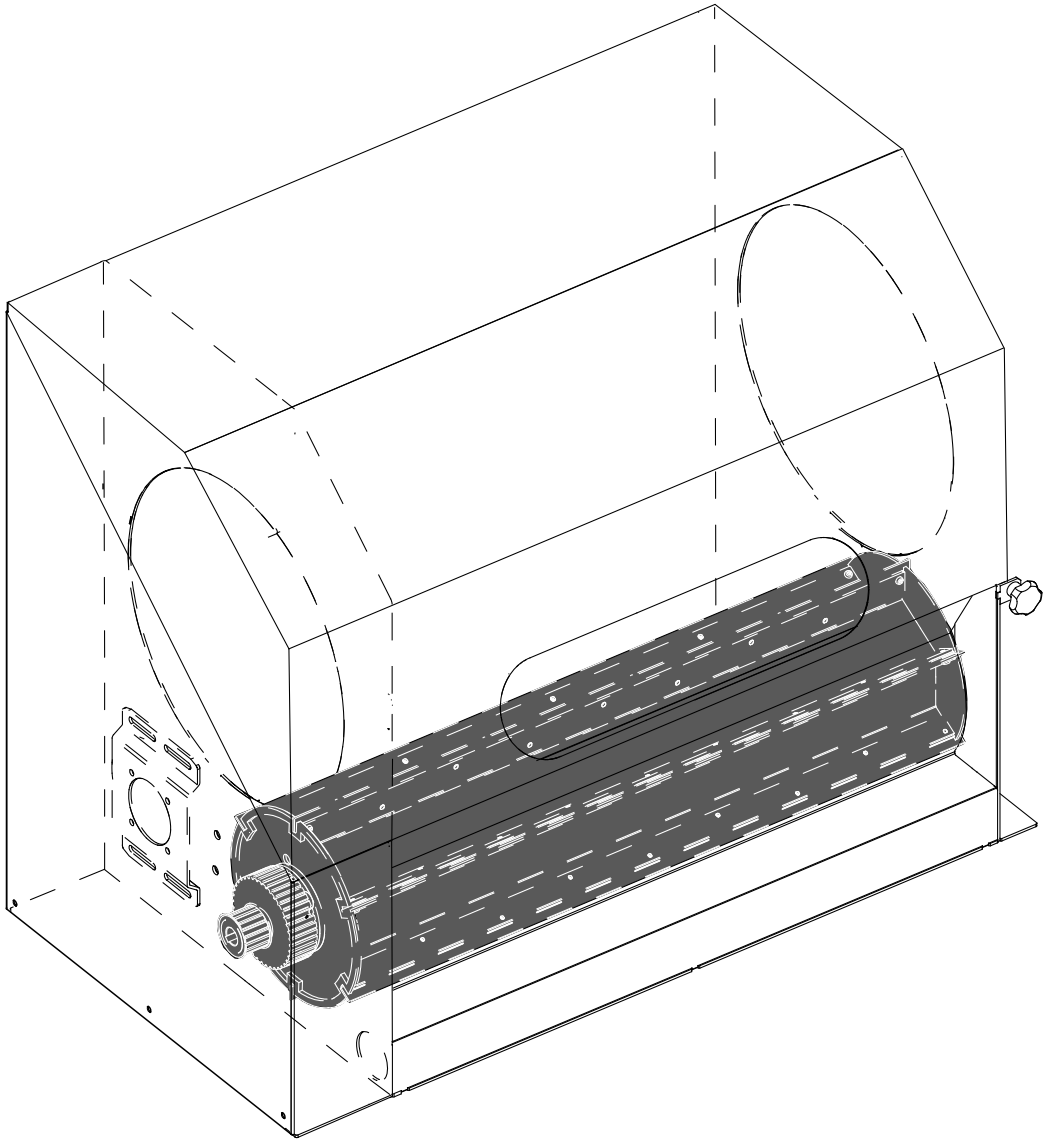

ZNP000000000000001000067827001000_1.svg

# A 21

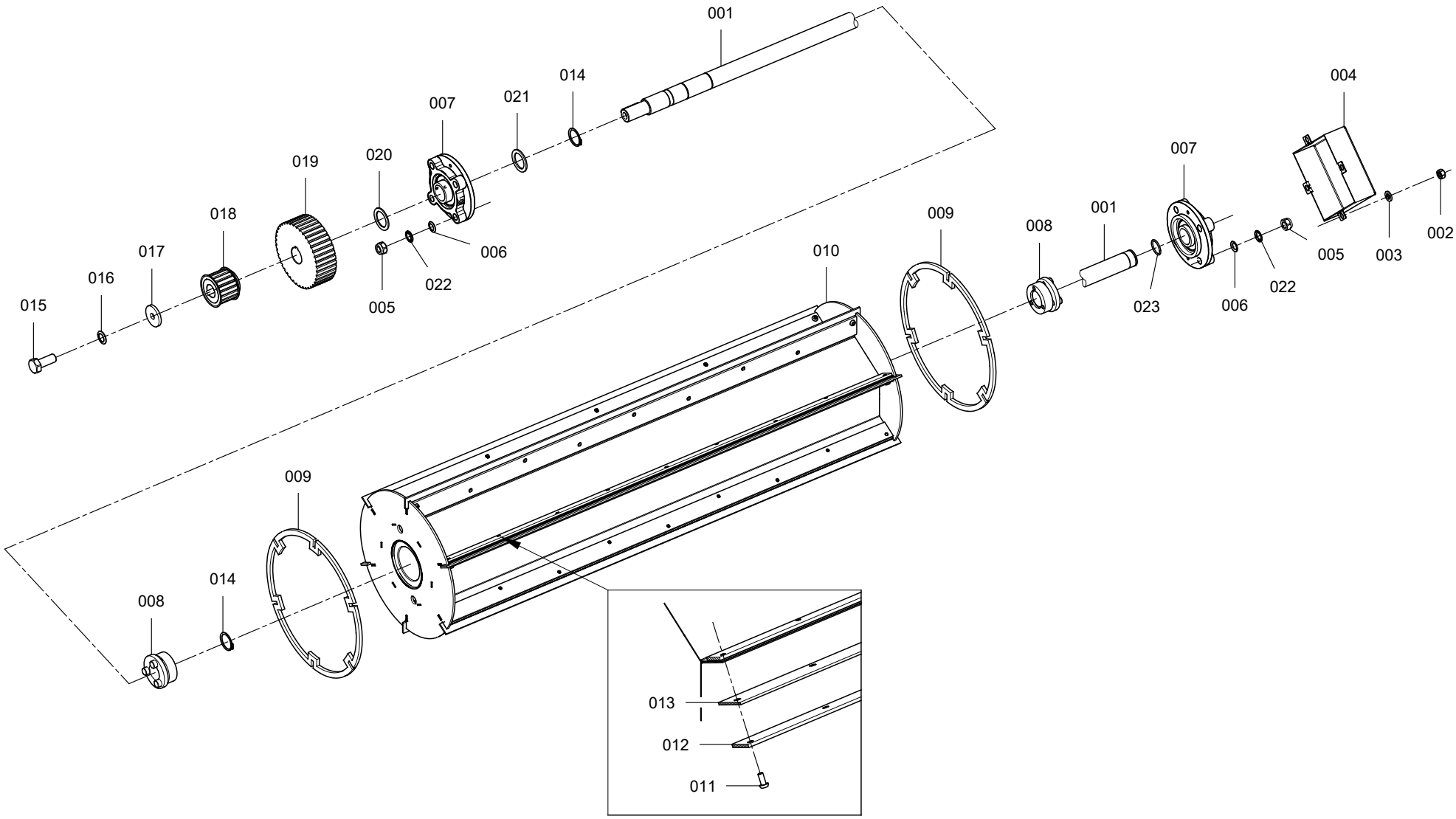


ZED0000000000000000001116160301001_1.svg

Customer
Blessed Textiles Ltd Unit 4, 56984

RIETER

| Catalog No.<br>Katalog-Nr. | Material no.<br>Material-Nr. | Material Designation | Materialbezeichnung | Symbol<br>Symbol |
|---|---|---|---|---|
| 21010.001 | 11112836 | Shaft | Welle | |
| 21010.002 | 10431759 | Hex. nut M6-8 | 6kt-Mutter M6-8 | |
| 21010.003 | 10456142 | Washer 6.4-St-200HV | Scheibe 6.4-St-200HV | |
| 21010.004 | 10330540 | Bearing cover | Lagerdeckel | |
| 21010.005 | 0900-1294 | Hex. nut M8-6 | 6kt-Mutter M8-6 | |
| 21010.006 | 10478061 | Washer 8.4-St-200HV | Scheibe 8.4-St-200HV | |
| 21010.007 | 10175477 | Flange bearing 30-FYC30TF | Flanschlager 30-FYC30TF | |
| 21010.008 | 0900-1736 | Set of tension elements 30/55 | Spannsatz 30/55 | |
| 21010.009 | 10203646 | Felt ring | Filzring | |
| 21010.010 | 10334990 | Take-off roller | Abnahmewalze | |
| 21010.011 | 10109746 | Oval head screw M6x14 | Linsenschraube M6x14 | |
| 21010.012 | 10330539 | Flat connecting | Klemmleiste | |
| 21010.013 | 10176045 | Wiper | Abstreifer | |
| 21010.014 | 10355058 | Locking ring 30x1.5 | Sicherungsring 30x1.5 | |
| 21010.015 | 10259092 | Hex. screw M10x25 | 6kt-Schraube M10x25 | |
| 21010.016 | 10259423 | Locking washer 10.5/16 | Sicherungsscheibe 10.5/16 | |
| 21010.017 | 10454571 | Shaft end washer 11/40x5 | Vorlegscheibe 11/40x5 | |
| 21010.018 | 10640881 | Toothed belt disc P22-H8M-20 | Zahnriemenscheibe P22-H8M-20 | |
| 21010.019 | 10640914 | Toothed belt disc P49-H8M-20 | Zahnriemenscheibe P49-H8M-20 | |
| 21010.020 | 10659992 | Distance sleeve | Distanzbuchse | |
| 21010.021 | 0907-9077 | Support disc S30/42x2.5 | Stützscheibe S30/42x2.5 | |
| 21010.022 | 10461551 | Locking washer 8.4/13 | Sicherungsscheibe 8.4/13 | |
| 21010.023 | 10259348 | O-ring 24.5x3-NBR-70 ShA | O-Ring 24.5x3-NBR-70 ShA | |

# A 21

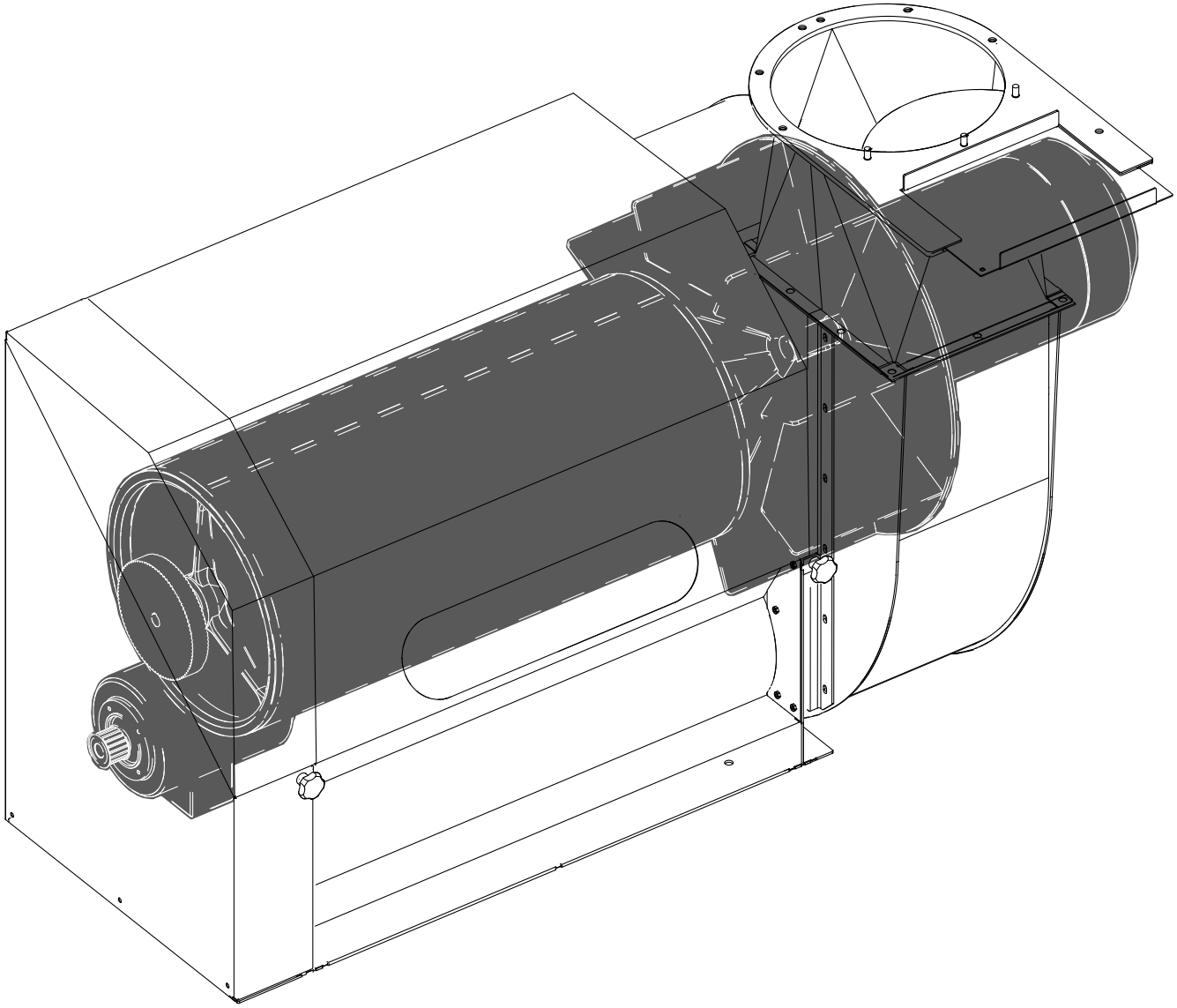

ZNP000000000000001000067827201000_1.svg

# A 21

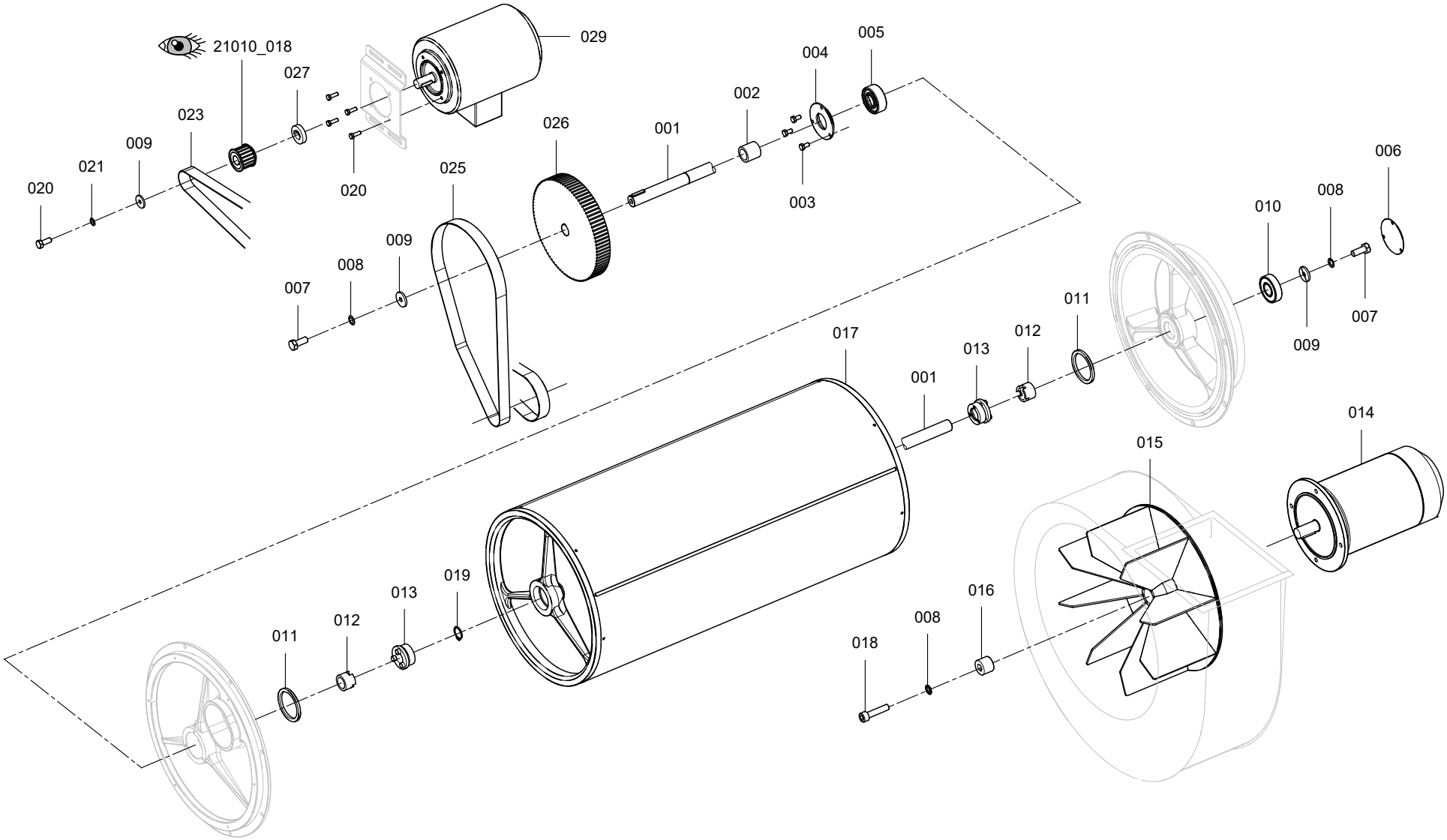


ZED0000000000000000001116160401002_1.svg

Customer
Blessed Textiles Ltd Unit 4, 56984

RIETER

| Catalog No. Katalog-Nr. | Material no. Material-Nr. | Material Designation | Materialbezeichnung | Symbol Symbol |
|---|---|---|---|---|
| 21020.001 | 10638301 | Shaft | Welle | |
| 21020.002 | 10659994 | Distance sleeve | Distanzbuchse | |
| 21020.003 | 10259079 | Hex. screw M6x12 | 6kt-Schraube M6x12 | |
| 21020.004 | 9601-0282 | Bearing cover | Lagerdeckel | |
| 21020.005 | 0900-0323 | Self-aligning brg. 30/72x27-2306-2RS | Pen.Kugellager 30/72x27-2306-2RS | |
| 21020.006 | 10330541 | Bearing cover | Lagerdeckel | |
| 21020.007 | 10259092 | Hex. screw M10x25 | 6kt-Schraube M10x25 | |
| 21020.008 | 10259423 | Locking washer 10.5/16 | Sicherungsscheibe 10.5/16 | |
| 21020.009 | 10454571 | Shaft end washer 11/40x5 | Vorlegscheibe 11/40x5 | |
| 21020.010 | 10467012 | Deep-groove ball brg. 30/72x19-6306-2RS | Ri.Kugellager 30/72x19-6306-2RS | |
| 21020.011 | 9601-0251 | Felt ring | Filzring | |
| 21020.012 | 9601-0289 | Grooved bushing | Buchse m. Nut | |
| 21020.013 | 0900-1736 | Set of tension elements 30/55 | Spannsatz 30/55 | |
| 21020.014 | 10844045 | Motor 3kW 400V / 50Hz | Motor 3kW 400V / 50Hz | |
| 21020.015 | 10330542 | Fan wheel complete 50Hz | Ventilatorrad komplett 50Hz | |
| 21020.016 | 9601-0165 | Tappet | Zapfen | |
| 21020.017 | 10480856 | Sieve drum | Siebtrommel | |
| 21020.018 | 10487977 | Cyl. screw M10x45 | Zyl.Schraube M10x45 | |
| 21020.019 | 10355058 | Locking ring 30x1.5 | Sicherungsring 30x1.5 | |
| 21020.020 | 10259085 | Hex. screw M8x20 | 6kt-Schraube M8x20 | |
| 21020.021 | 10461551 | Locking washer 8.4/13 | Sicherungsscheibe 8.4/13 | |
| 21020.023 | 10661267 | Toothed belt 880-H8M-20 | Zahnriemen 880-H8M-20 | ⊕ |
| 21020.025 | 10661268 | Toothed belt 1360-H8M-20 | Zahnriemen 1360-H8M-20 | ⊕ |
| 21020.026 | 10640915 | Toothed belt disc P112-H8M-20 | Zahnriemenscheibe P112-H8M-20 | |
| 21020.027 | 10667282 | Distance sleeve | Distanzbuchse | |
| 21020.029 | 10904884 | Motor 0,75kW 400V / 50Hz | Motor 0,75kW 400V / 50Hz | |

# A 21

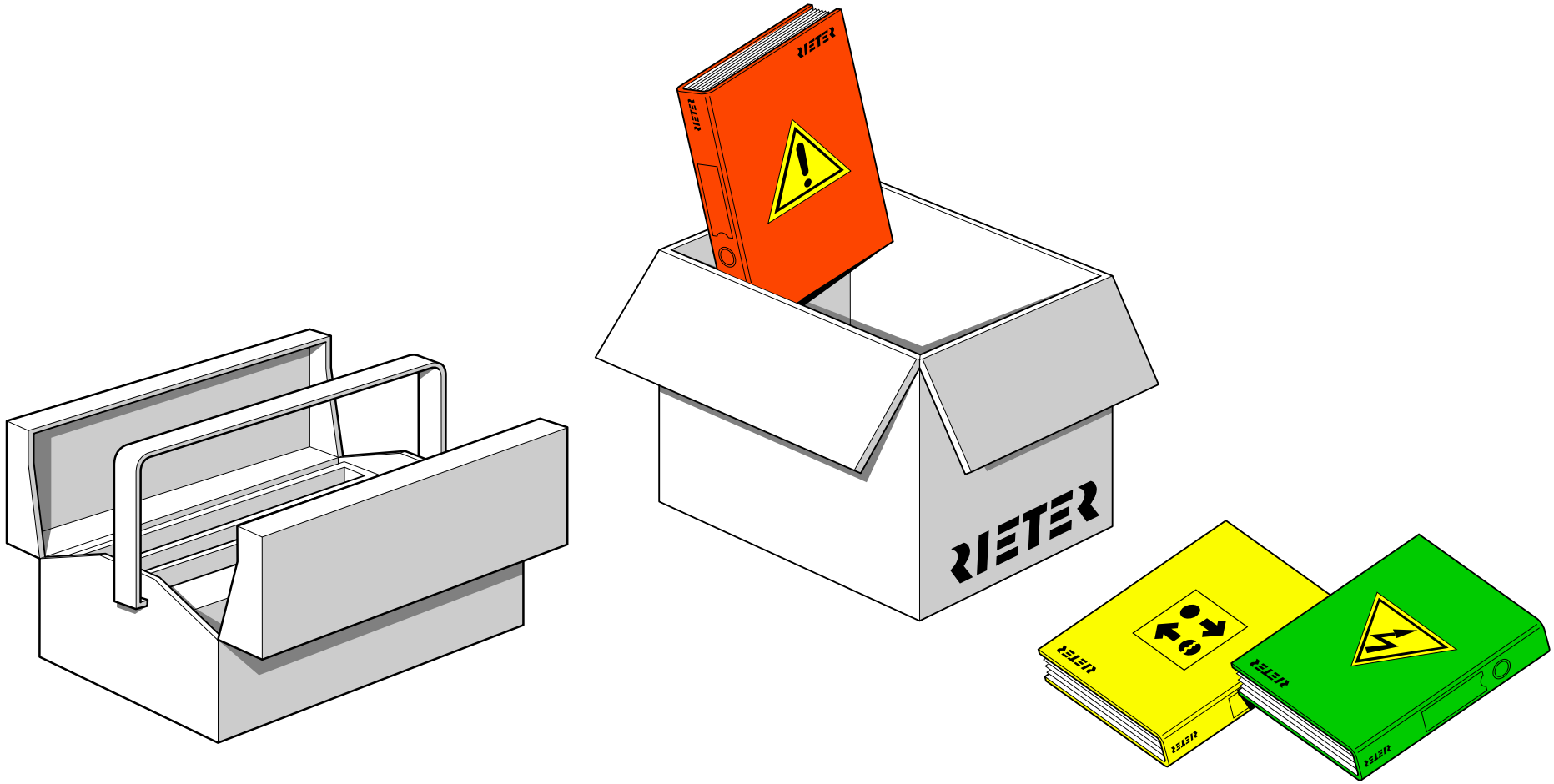


ZNP0000000000000001000067827901000_1.svg

# A 21

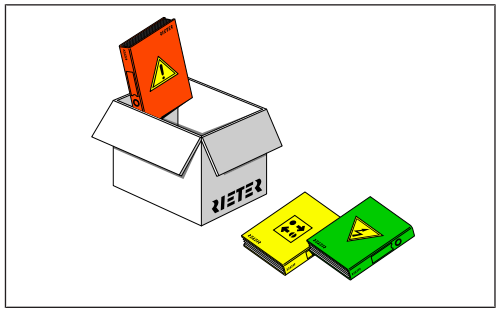


**970**

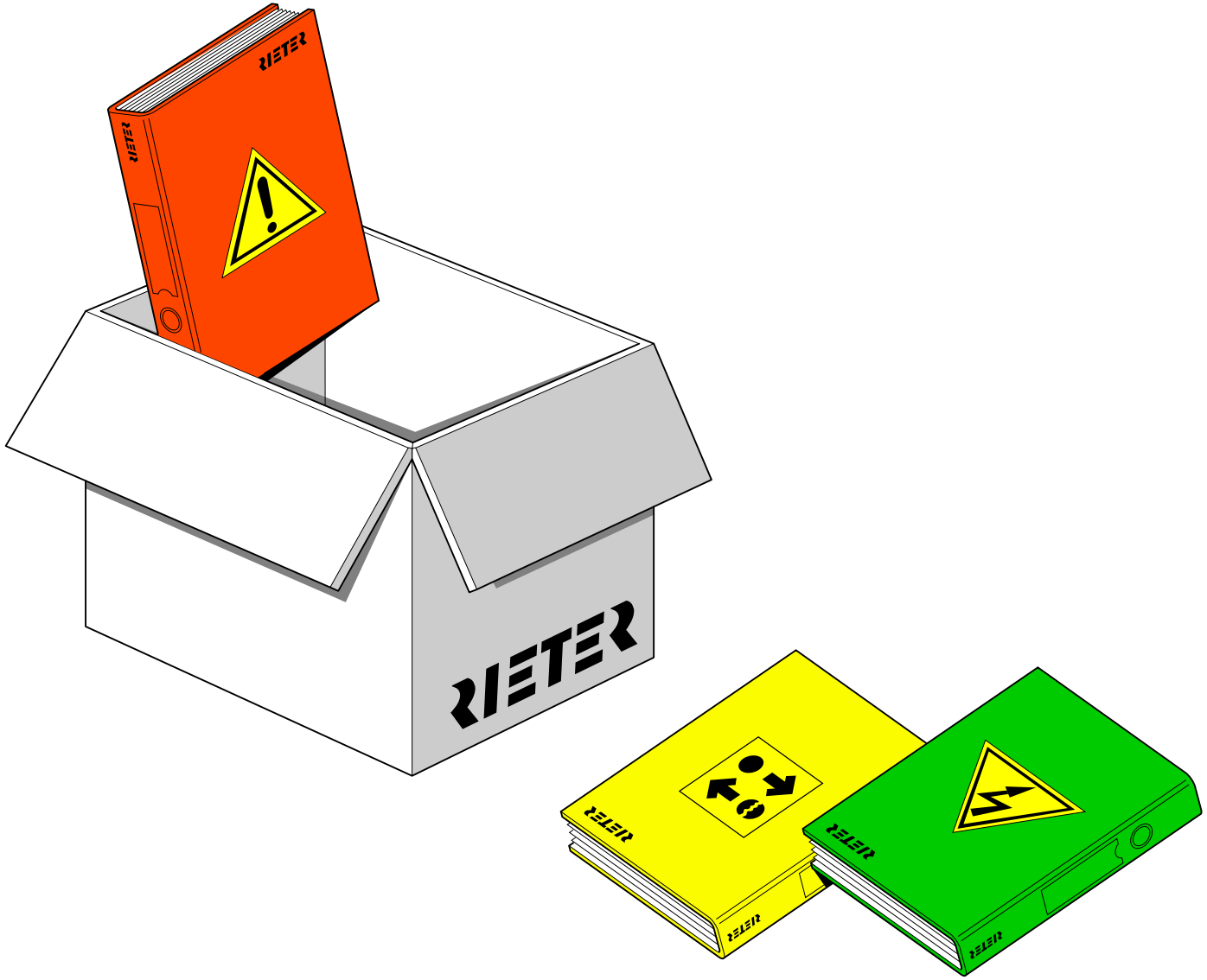


ZNP000000000000001000067828201000_1.svg

# A 21

001

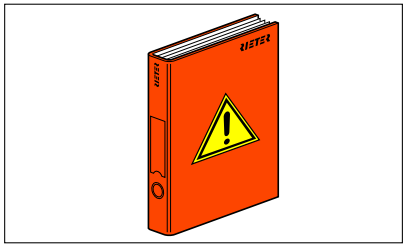

002

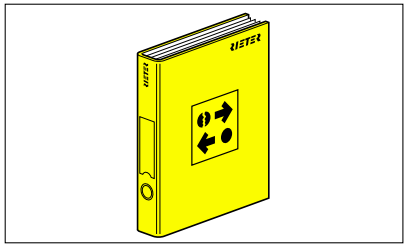

003

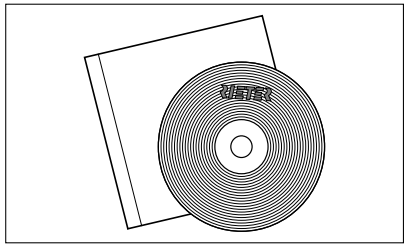

004

ZED0000000000000000001116160601001_1.svg

**Customer**
**Blessed Textiles Ltd Unit 4, 56984**

| Catalog No.<br>Katalog-Nr. | Material no.<br>Material-Nr. | Material Designation | Materialbezeichnung | Symbol<br>Symbol |
|---|---|---|---|---|
| 970.001 | 11077538 | Schema condenser A 21 V4.1 en/de | Schema Ansaugkasten A 21 V4.1 en/de | |
| 970.002 | 10798623 | Operation manual A 21 V4.1 en | Betriebsanleitung A 21 V4.1 en | |
| 970.003 | 10996495 | Spare parts catalog A 21 V 4.1 | Ersatzteilkatalog A 21 V 4.1 | |
| 970.004 | 10996498 | Documentation digital A 21 V 4.1 | Dokumentation digital A 21 V 4.1 | |

**Rieter Machine Works Ltd.**
Klosterstrasse 20
CH-8406 Winterthur
T +41 52 208 7171
F +41 52 208 8320
machines@rieter.com
aftersales@rieter.com

**Rieter India Private Ltd.**
Gat No. 768/2, Village Wing
Shindewadi-Bhor Road
Taluka Khandala, District Satara
IN-Maharashtra 412 801
T +91 2169 304 141
F +91 2169 304 226

**Rieter (China) Textile Instruments Co., Ltd. Shanghai Branch**
Unit B-1, 6F, Building A,
Synnex International Park
1068 West Tianshan Road
CN-Shanghai 200335
T +86 21 6037 3333
F +86 21 6037 3399

© Rieter. All content (text, photographs, drawings and graphic) is protected by copyright. It may not be changed, neither completely nor in extracts copied, duplicated or published without written approval. Machinery or parts thereof as shown in photographs or drawings or graphics may be subject of patent or design protection.

www.rieter.com